Cambridge International Examinations
Cambridge International General Certificate of Secondary Education

CANDIDATE NAME	
CENTRE NUMBER	
CANDIDATE NUMBER	

PHYSICS **0625/43**

Paper 4 Theory (Extended) **May/June 2017**

1 hour 15 minutes

Candidates answer on the Question Paper.

No Additional Materials are required.

READ THESE INSTRUCTIONS FIRST

Write your Centre number, candidate number and name on all the work you hand in.
Write in dark blue or black pen.
You may use an HB pencil for any diagrams or graphs.
Do not use staples, paper clips, glue or correction fluid.
DO **NOT** WRITE IN ANY BARCODES.

Answer **all** questions.
Electronic calculators may be used.
You may lose marks if you do not show your working or if you do not use appropriate units.
Take the weight of 1 kg to be 10 N (acceleration of free fall = 10 m / s^2).

At the end of the examination, fasten all your work securely together.
The number of marks is given in brackets [ ] at the end of each question or part question.

The syllabus is approved for use in England, Wales and Northern Ireland as a Cambridge International Level 1/Level 2 Certificate.

This document consists of **18** printed pages and **2** blank pages.

DC (KN/JG) 129080/5
© UCLES 2017

CAMBRIDGE International Examinations

www.root19.com +91 - 9969 353 391

1 **(a)** Acceleration is a vector quantity.

Underline the **two** vector quantities in the list below.

energy **force** **frequency** **impulse** **mass** **refractive index**

[1]

(b) A car accelerates uniformly from rest at 2.2 m / s^2 for 3.0 s.

(i) Calculate the speed of the car at time t = 3.0 s.

speed = ...[2]

(ii) At time t = 3.0 s, it has travelled a distance of 9.9 m.

Calculate the average speed of the car during the first 3.0 s of the journey.

speed = ...[1]

(iii) On Fig. 1.1, sketch a distance-time graph for the first 3.0 s of the journey.

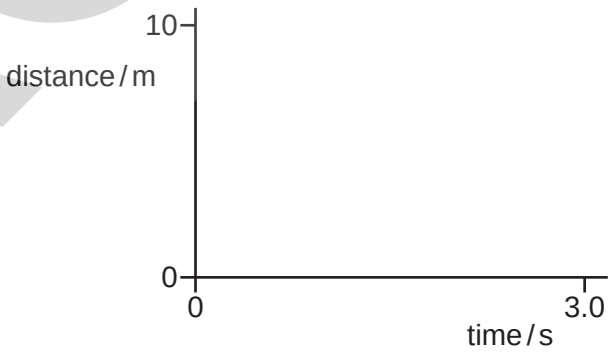

Fig. 1.1

[3]

[Total: 7]

www.root19.com +91 - 9969 353 391

2 **(a)** State the word equation that defines *momentum*.

.....[1]

(b) A metal block A, travelling in a straight line at 4.0 m/s on a smooth surface, collides with a second metal block B which is at rest. Fig. 2.1 shows the two metal blocks A and B before and after the collision.

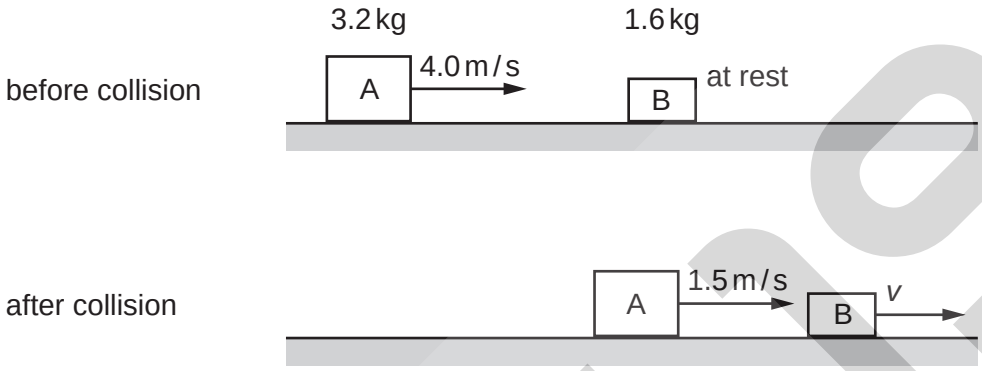

Fig. 2.1

The mass of A is 3.2 kg. The mass of B is 1.6 kg.
After the collision, the velocity of A is 1.5 m/s.

Calculate

(i) the momentum of A before the collision,

momentum = ...[2]

(ii) the velocity *v* of B after the collision.

v = ...[3]

www.root19.com +91 - 9969 353 301

(c) In the collision that occurred in **(b)**, block A and block B are in contact for 0.050 s.

Calculate the average force that is exerted on B during the collision.

average force = ...[2]

(d) After the collision in **(b)**, the total kinetic energy of the two blocks is less than the kinetic energy of block A before the collision.

Suggest **one** reason for this.

.....

.....[1]

[Total: 9]

© UCLES 2017
www.root19.com

+91 - 9969 353 391

3 A block of wood has a volume of 210 cm^3 and a mass of 180 g.

(a) Calculate the density of the block of wood.

density = ...[2]

(b) The block is held just above the surface of a liquid of density 0.88 g / cm^3.

Predict and explain what happens when the block is released.

.....

.....

.....[2]

[Total: 4]

© UCLES 2017

www.root19.com +91 - 9969 353 301

4 In the braking system of a car, the brake pedal rotates about a pivot when the pedal is pressed. Fig. 4.1 shows part of the braking system.

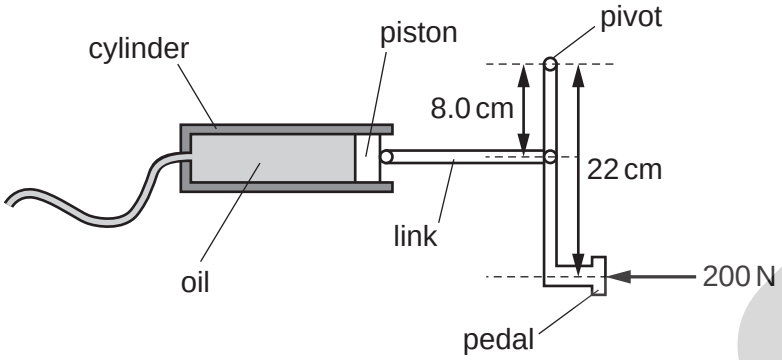

Fig. 4.1 (not to scale)

The driver exerts a force of 200 N on the pedal at a distance 22 cm from the pivot. As the pedal rotates about the pivot, a force is exerted on the piston and the pressure of the oil increases.

The area of the piston in the cylinder is $5.0 \times 10^{-4}\,m^2$ ($0.00050\,m^2$).

Calculate the increase in the pressure of the oil.

increase in pressure = ...[4]

[Total: 4]

www.root19.com +91 - 9969 353 391

5 A footballer and a referee are discussing a puddle of water that has formed on the pitch. The footballer wears a white shirt whilst the referee wears a black shirt which, apart from its colour, is identical.

Fig. 5.1 shows the two men looking at the puddle.

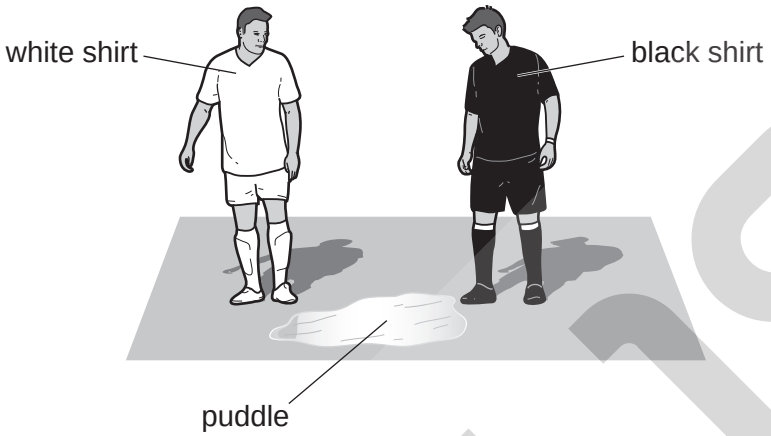

Fig. 5.1

The weather is bright and sunny.

(a) State and explain how the temperature of the white shirt differs from the temperature of the black shirt.

.....

.....

.....[2]

(b) The volume of water in the puddle is slowly decreasing.

(i) Describe how **two** changes in the weather conditions could affect the rate at which the puddle dries.

change 1 .....

effect .....

.....

change 2 .....

effect .....

.....

[2]

(ii) Explain, in terms of the water molecules, what happens as the puddle dries.

.....

.....

.....[2]

[Total: 6]

© UCLES 2017
www.root19.com

+91 - 9969 353 391

6 Fig. 6.1 shows a child releasing a balloon filled with helium.

Fig. 6.1

The pressure of the helium in the balloon keeps the balloon inflated.

(a) Explain how the particles of helium produce this pressure.

.....

.....

.....

.....[3]

(b) As the balloon travels upwards through the atmosphere, the volume of the helium increases. The temperature of the helium remains constant.

(i) State an equation that relates the volume of the helium to its pressure.

.....[1]

ROOT 19

www.root19.com +91 - 9969 353 301

(ii) Fig. 6.2 shows how the air pressure in the atmosphere changes with the height above ground level.

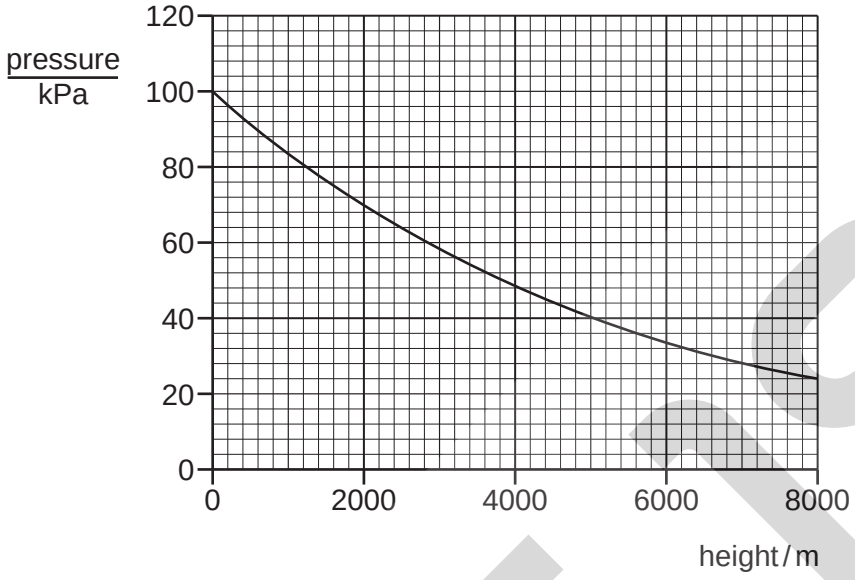

Fig. 6.2

1. Using Fig. 6.2, determine the pressure at ground level. Give the unit.

pressure = ... unit = ... [2]

2. Using Fig. 6.2, determine the height at which the volume of the helium in the balloon is twice the volume at ground level.

height = ...[2]

[Total: 8]

www.root19.com +91 - 9969 353 391

7 A loudspeaker is built into the side of a swimming pool. The loudspeaker produces sound waves in the water of wavelength 0.25 m.

(a) **(i)** The frequency of the sound waves is 6.0 kHz.

Calculate the speed of the sound waves in water.

speed of sound waves in water = ...[2]

(ii) State a typical value for the speed of sound in air.

speed of sound in air = ...[1]

(iii) State and explain, for the sound produced by the loudspeaker, how the wavelength of the sound in air compares with the wavelength of the sound in water.

.....

.....[1]

(b) Sound is a longitudinal wave.

Explain what is meant by a *longitudinal* wave.

.....

.....

.....[2]

(c) The sound emerges from the loudspeaker through a gap. The sound diffracts as it passes through the gap.

(i) State how the width of the gap affects the diffraction.

.....

.....[1]

(ii) State how the wavelength of the sound affects the diffraction.

.....

.....[1]

[Total: 8]

www.root19.com +91 - 9969 353 301

8 Red light travelling in air strikes the curved surface of a semi-circular glass block at P.
Fig. 8.1 shows the ray of light.

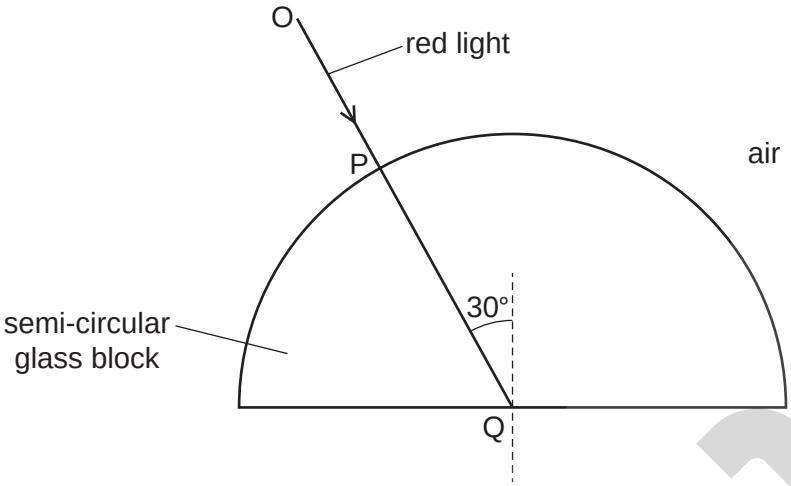

Fig. 8.1

The light travels in a straight line from O to Q.

(a) Explain why the light does **not** change direction as it enters the glass block at P.

.....

.....[1]

(b) The light travels in the glass to Q where it strikes the edge of the block at 30° to the normal.
The light then emerges into the air.

(i) The refractive index of the glass is 1.5.

Calculate the angle between the normal and the ray in the air after the light emerges from the block at Q.

angle = ...[3]

(ii) On Fig. 8.1, sketch the path of the light in the air after it emerges at Q. [1]

www.root19.com +91 - 9969 353 391

(c) The direction of the light striking the curved surface of the glass block is changed. The angle between the ray and the normal at Q gradually increases from 30° to 90°.

Describe what happens to the light that strikes the block at Q as this angle increases.

.....

.....

.....

.....

.....

.....[3]

[Total: 8]

www.root19.com +91 - 9969 353 301

9 A 12 V battery is connected in series to a 24 W lamp and to a parallel pair of identical resistors X and Y. Fig. 9.1 is the circuit diagram.

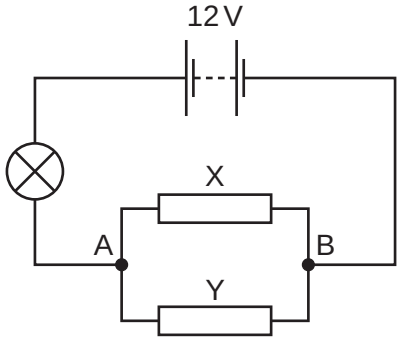

Fig. 9.1

The 24 W lamp lights at normal brightness when the potential difference (p.d.) across it is 6.0 V.

The lamp is at normal brightness.

(a) Calculate the resistance of the lamp.

resistance = ...[3]

(b) Determine

(i) the p.d. between A and B,

p.d. = ...[1]

(ii) the combined resistance of the parallel pair of identical resistors X and Y,

resistance = ...[1]

(iii) the resistance of X.

resistance = ...[2]

www.root19.com +91 - 9969 353 391

(c) Resistor X is removed from the circuit in Fig 9.1.

Explain why the lamp becomes dimmer.

.....

.....

.....

.....[2]

[Total: 9]

www.root19.com +91 - 9969 353 301

10 Fig. 10.1 shows a transformer that consists of two coils P and Q, and an iron core.

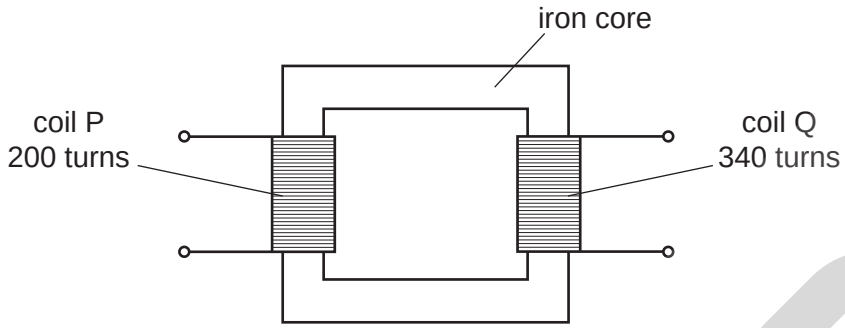

Fig. 10.1

There are 200 turns on coil P and 340 turns on coil Q.

A 4.0 V a.c. power supply is connected to coil P.

(a) **(i)** Explain why there is a voltage between the two terminals of coil Q.

.....

.....

.....

.....

.....[3]

(ii) Explain why the core of the transformer is made of soft iron.

.....

.....[1]

(b) **(i)** Calculate the voltage between the two terminals of coil Q.

voltage = ...[2]

(ii) A heater is connected to coil Q. The current in the heater is 3.5A. The transformer is 100% efficient.

Calculate the current in coil P.

current = ...[2]

(c) A transformer is used to step up the voltage before electrical energy is transmitted over long distances.

State and explain **one** economic effect of transmitting electrical energy at a high voltage.

.....

.....

.....

.....[2]

[Total: 10]

www.root19.com +91 - 9969 353 301

11 **(a)** Fig. 11.1 shows equipment that is used to investigate the effect of a magnetic field on the path of a beam of γ-rays.

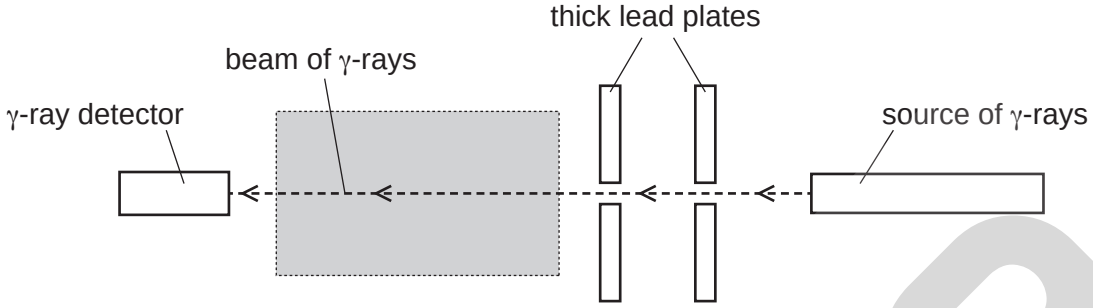

Fig. 11.1

A radioactive source emits γ-rays. The γ-rays pass through two small holes in thick lead plates. Then the γ-rays pass through the shaded region and into the detector.

(i) Suggest the purpose of the two lead plates.

.....

.....[1]

(ii) A magnetic field, directed into the page, is set up in the shaded region.

State and explain what happens to the reading of the detector.

.....

.....

.....

.....[3]

(b) State the relative ionising effects of α-particles, β-particles and γ-rays. Suggest an explanation for the differences.

.....

.....

.....

.....[3]

[Total: 7]

www.root19.com +91 - 9969 353 391

BLANK PAGE

© UCLES 2017
www.root19.com

+91 - 9969 353 391

BLANK PAGE

Permission to reproduce items where third-party owned material protected by copyright is included has been sought and cleared where possible. Every reasonable effort has been made by the publisher (UCLES) to trace copyright holders, but if any items requiring clearance have unwittingly been included, the publisher will be pleased to make amends at the earliest possible opportunity.

To avoid the issue of disclosure of answer-related information to candidates, all copyright acknowledgements are reproduced online in the Cambridge International Examinations Copyright Acknowledgements Booklet. This is produced for each series of examinations and is freely available to download at www.cie.org.uk after the live examination series.

Cambridge International Examinations is part of the Cambridge Assessment Group. Cambridge Assessment is the brand name of University of Cambridge Local Examinations Syndicate (UCLES), which is itself a department of the University of Cambridge.

www.root19.com +91 - 9969 353 391